YT—6023—A1 Lens Specification

1.SENSOR SIZE		PCC030K(644*484)
2.OPTICAL TTL	=	12.91±0.3
3.WAVELENGTH	λ=	400-700nm
4.FOCAL LENGTH (EFL)	f=	0.91mm
5.F/NO (INFINITE)	F/NO=	2.2
6.BACK FOCAL LENGTH	BFL=	2.15
7.FLANGE BACK LENGTH	FBL=	1.4
8.FIELD OF VIEW(D)	>	174°(⌀2.74)
FIELD OF VIEW(H)	>	136°(⌀2.19)
FIELD OF VIEW(V)	>	102°(⌀1.65)
9.F-Tht DISTORTION	=	-5.7%
10.CHIEF RAY ANGLE	=	2°
11.RELATIVE ILLUMINATION	=	75%
12.THREAD SIZE		M8*P0.5-6g
13.STRUCTURE		4G2P+IR
14.MAX Img-Circle(mm)	=	⌀3.20

15.IR FILTER SPEC.(Built-in,Others available)

Tavg>=90% @ 420-600 nm

T=50% @627±4nm

Tavg<=3% @ 700-1000 nm

T<5% @ 1050 nm

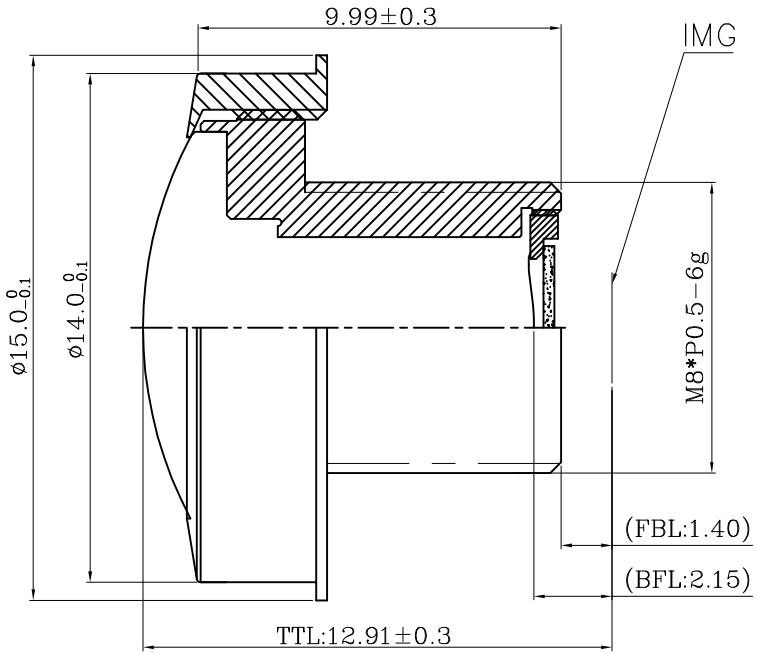

REV	DESCRIPTION	DATE	NAME
①			
②			
③			
④			

NAME	YT—6023—A1	SCALE		DRAWN	黄光深
VIEW	REV 00	DATE	2024.03.18	CHECKED	
Wintop Optics		BORDER		APPROVED	